5-1. THE EXPLODED VIEW OF TOP COVER ASSEMBLY

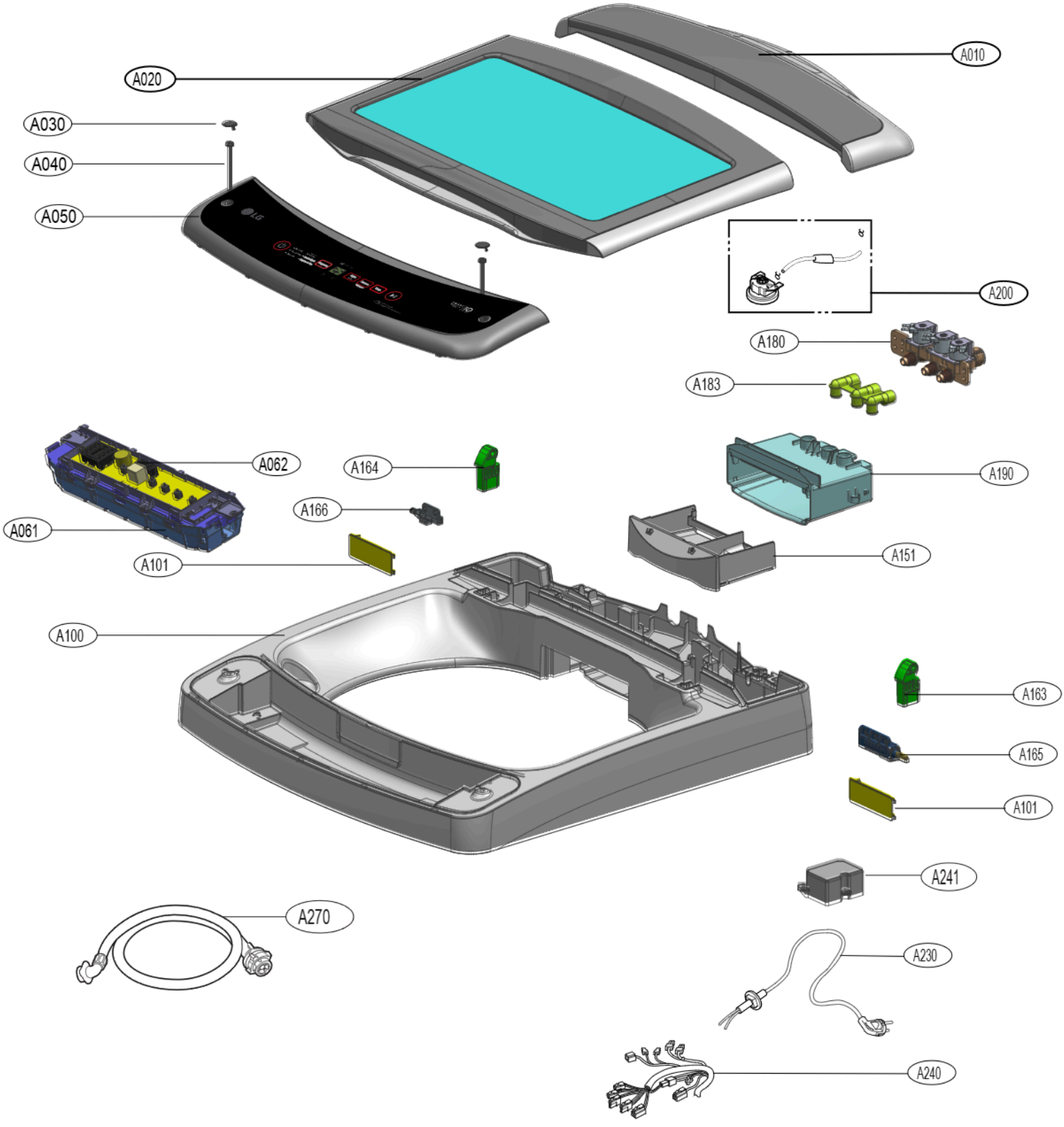

Copyright © 2020 LG Electronics Inc. All rights reserved.
Only training and service purposes.

5-2. THE EXPLODED VIEW OF OUT CASE ASSEMBLY

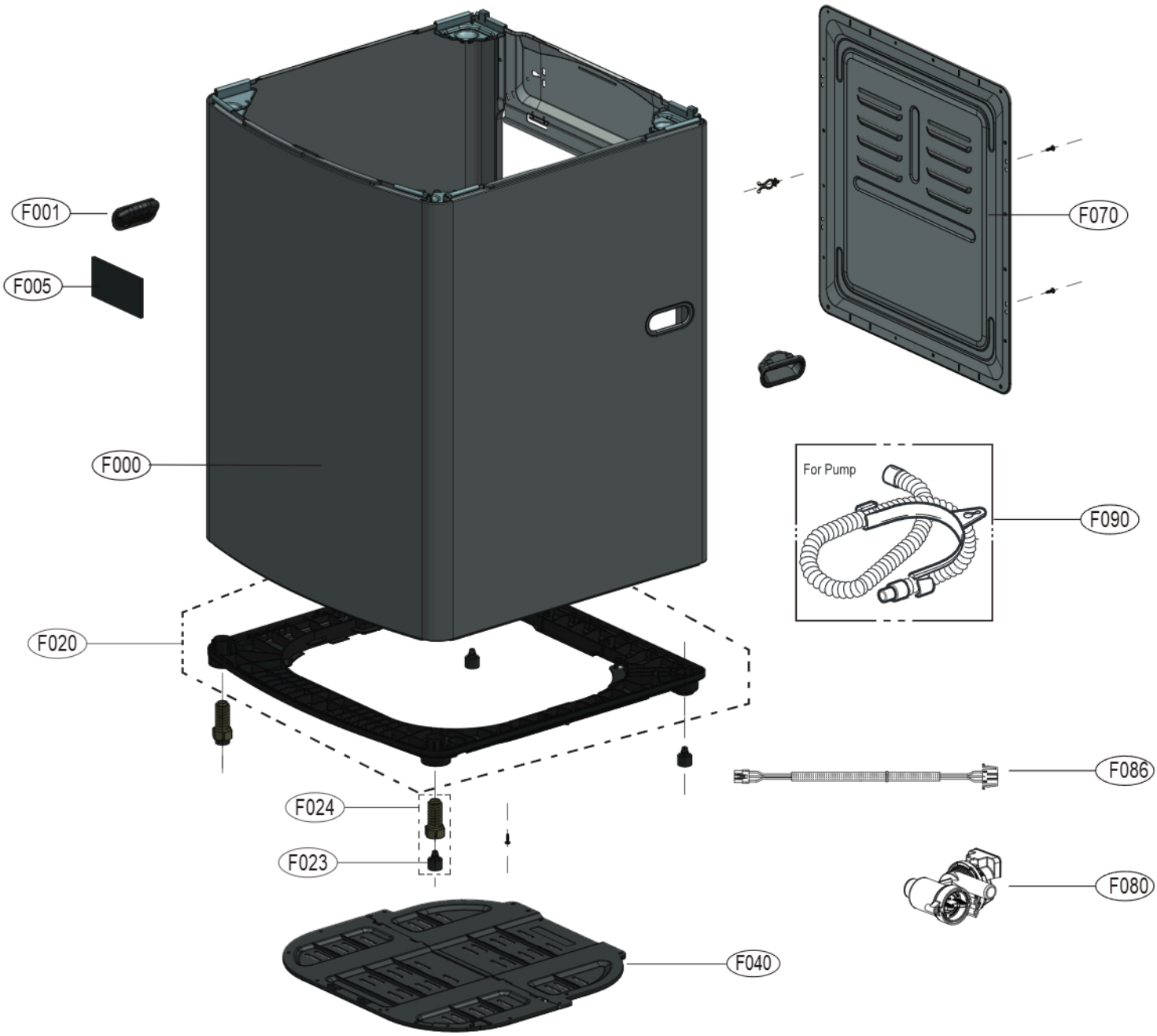

Copyright © 2020 LG Electronics Inc. All rights reserved.
Only training and service purposes.

5-3. THE EXPLODED VIEW OF TUB ASSEMBLY

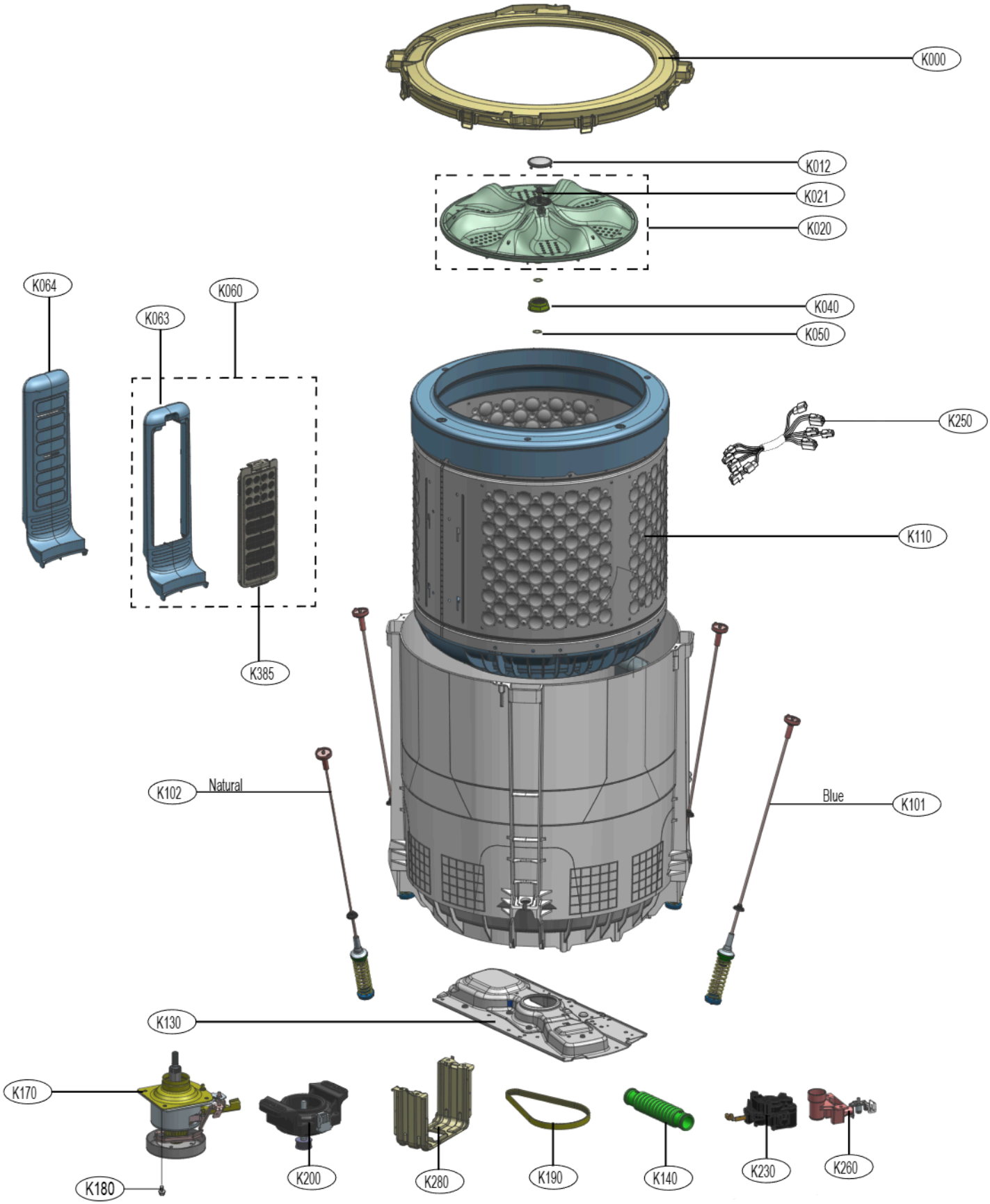

Copyright © 2020 LG Electronics Inc. All rights reserved.
Only training and service purposes.